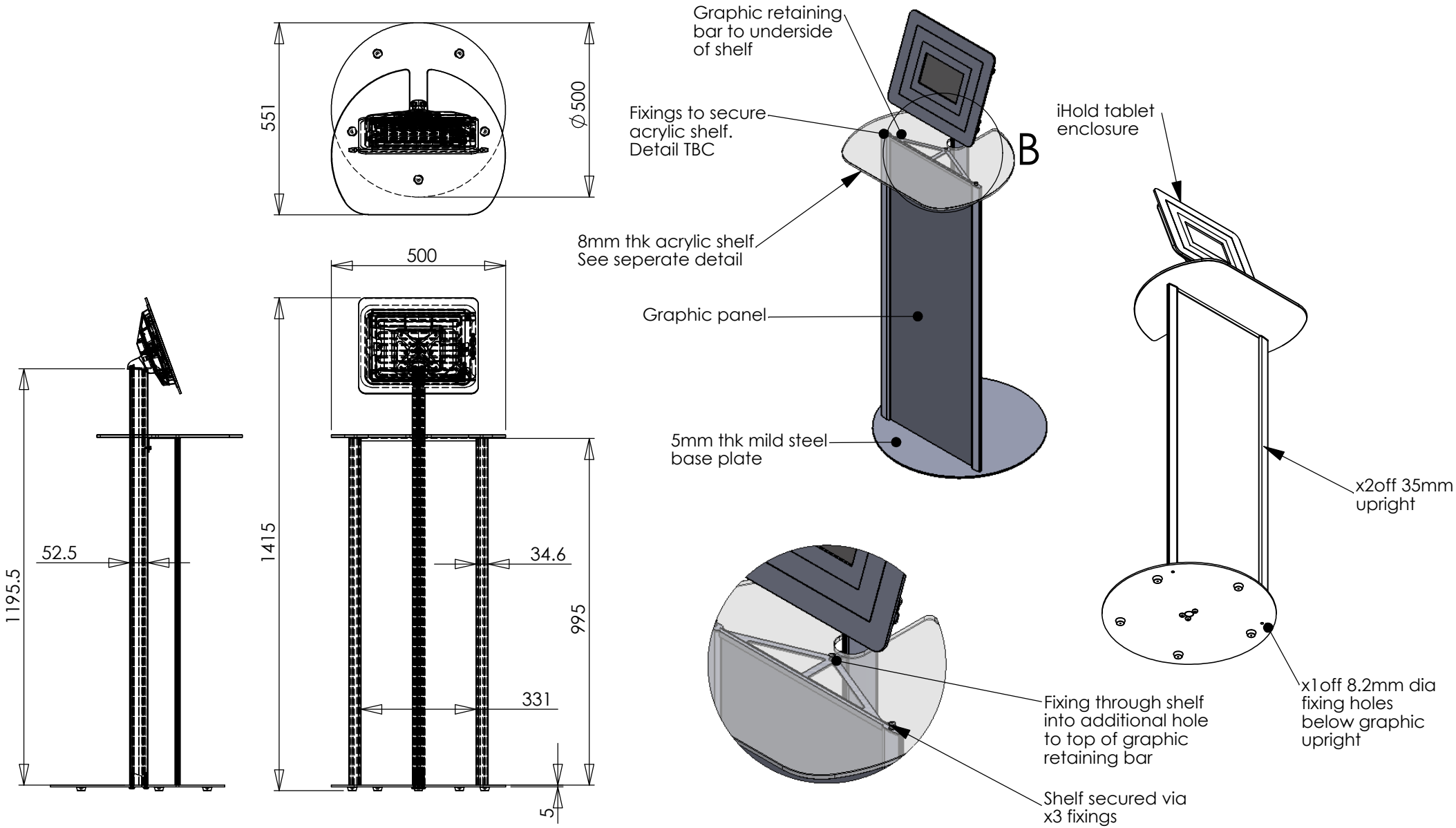
551
⌀500
500
1195.5
52.5
1415
34.6
995
331
5
Graphic retaining bar to underside of shelf
Fixings to secure acrylic shelf. Detail TBC
B
8mm thk acrylic shelf See seperate detail
Graphic panel
5mm thk mild steel base plate
iHold tablet enclosure
x2off 35mm upright
x1off 8.2mm dia fixing holes below graphic upright
Fixing through shelf into additional hole to top of graphic retaining bar
Shelf secured via x3 fixings

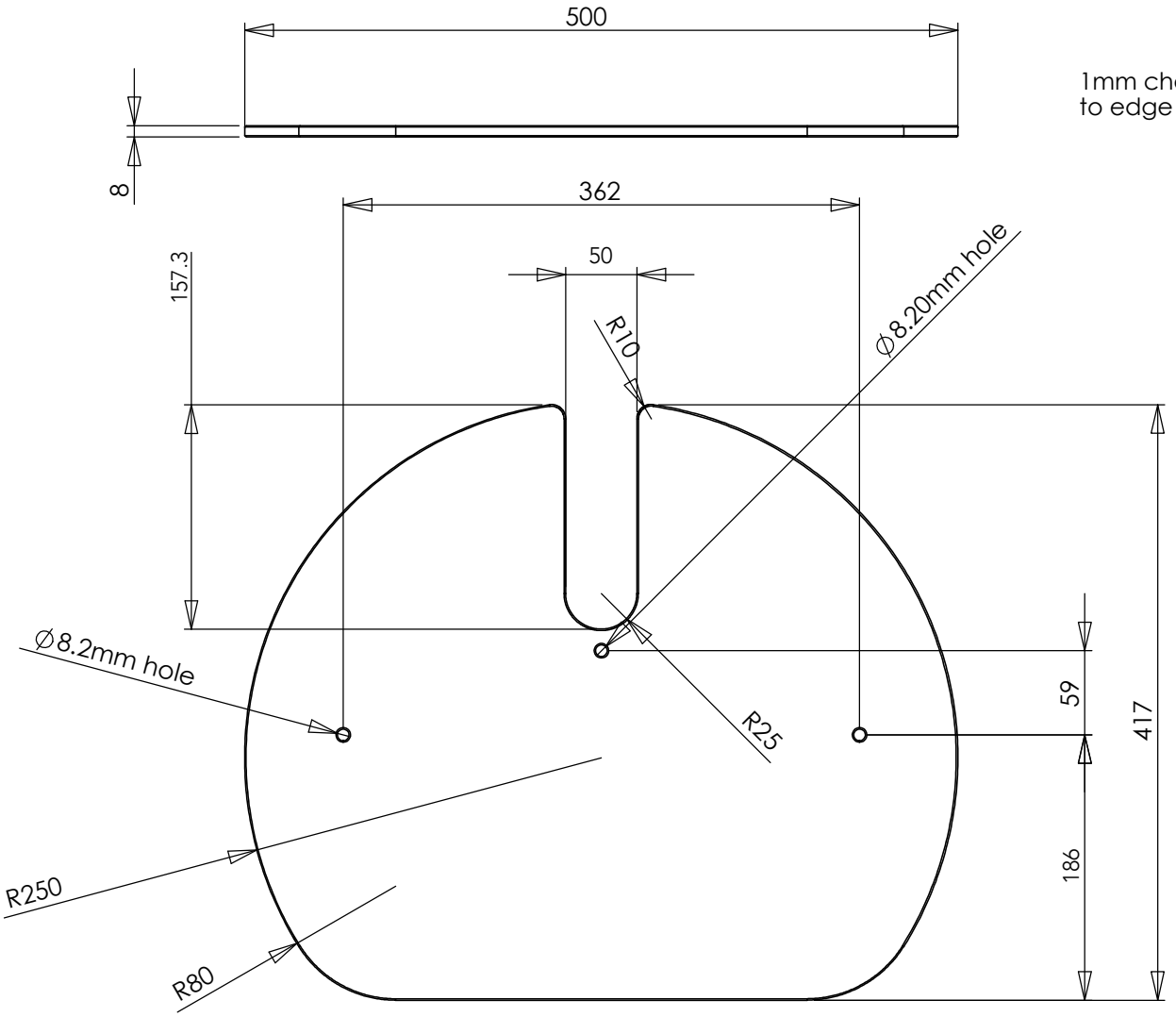
500
8
362
50
157.3
R10
Ø8.20mm hole
Ø8.2mm hole
R25
59
417
186
R250
R80

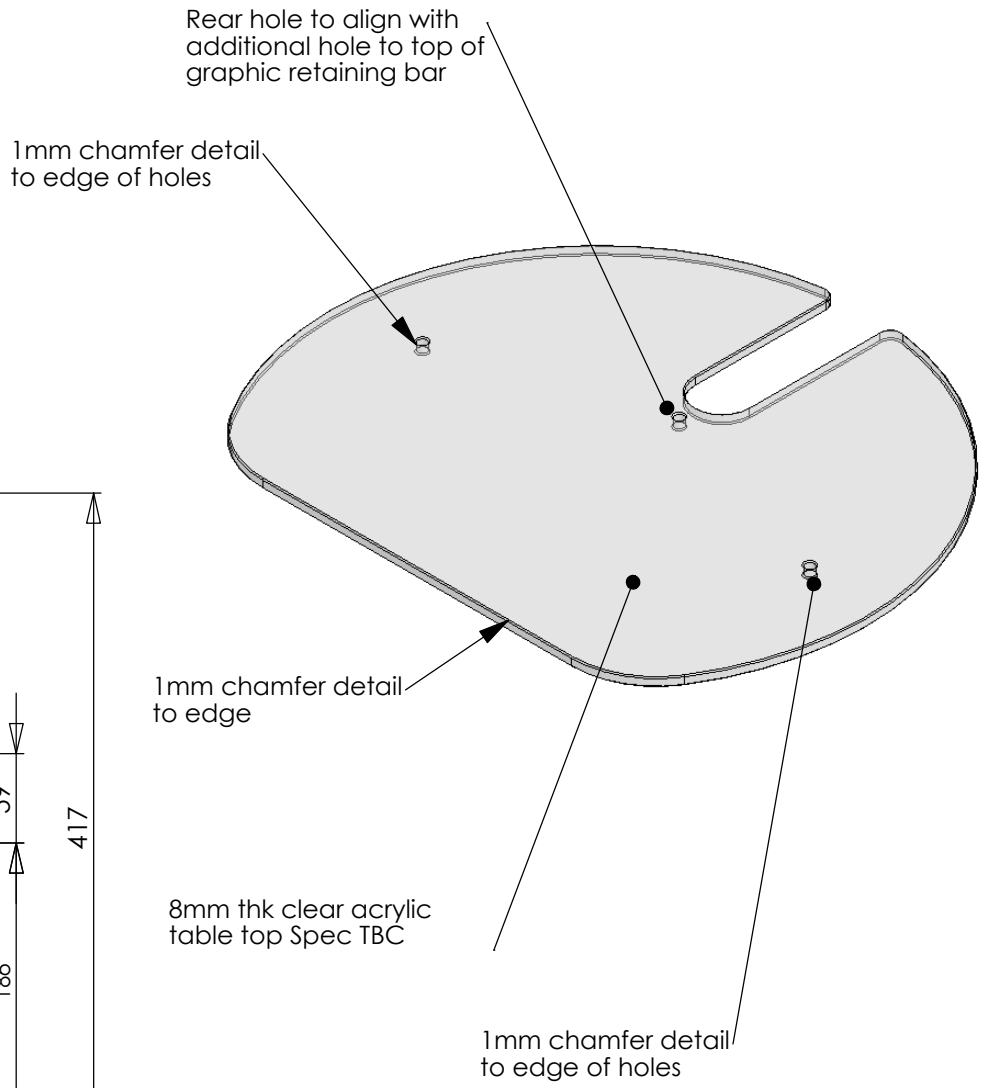
Rear hole to align with additional hole to top of graphic retaining bar
1mm chamfer detail to edge of holes
1mm chamfer detail to edge
8mm thk clear acrylic table top Spec TBC
1mm chamfer detail to edge of holes